About:
- 2-cell to 7-cell battery managment system designed to handle and protect Li-Ion and Li-Po batteries.

Features:
- Estimates battery state of charge (SoC), state of health (SoH) and others
- Reads battery voltage, cells voltages and battery current
- Reads battery temperature (NTC) and ambient (board) temperature
- Balances battery cells
- Provides I2C and CAN communications to the user
- Powerdown mode consumes < 2uA

Protections - there are 3 levels of protection
- Software protections, MCU control, safelty shuting down battery charge/discharge
- Hardware protection (TPS1200 switch) which detect battery overvoltage and overcurrent and shuts it down, independetly of MCU
- Fuse and TVS protection - in case that software and TPS1200 switch fails, there is a fuse which burns and physically disconnects the battery.

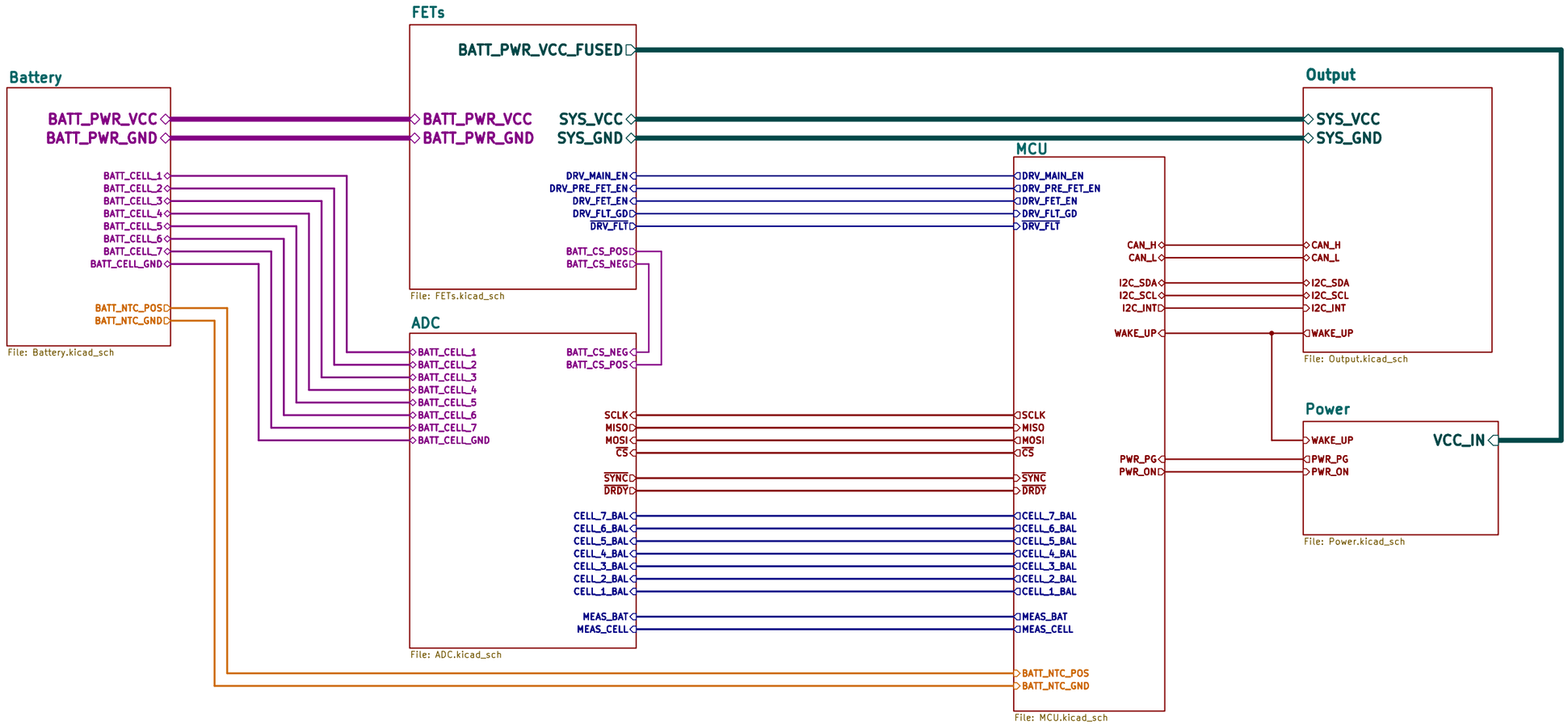

Open Source Battery Management System
Designed by OpenBatt team
More at openbatt.dev

Sheet: /
File: openbms.kicad_sch

Title: OpenBMS

Size: A3	Date: 2026-03-24	Rev: A
KiCad E.D.A. 9.0.7		Id: 1/7

About:
- ADC circuit for battery voltage and current reading
- Cell FETs for cell balancing

Design Parameters:
- 7-cell battery voltage monitoring (between 2.5V and 4.3V)
- 7-cell battery balancing (up to 86mA per cell)
- Current monitoring (up to 20A)

How to use it:
1) Battery cells are disabled from ADC by default to disable current leaking from battery when BMS is off. To enable battery reading, set MEAS_CELL to 1
2) Read differential AINxP - AINxN voltage and multiply with 71.3/3.3 = 21.606 to get batter cell voltage in V
3) Read battery current by reading voltage between AIN0P and AIN0N. Divide voltage by 0.001 (shunt resisot is 1m ohm) to get current in A
4) There is a special case to read overall battery voltage by setting MEAS_BATT to 1 (while keeping MEAS_CELL at 1) and read voltage between AIN7P and AIN7N (like you would read cell 7) and multiply result with 74.6/6.6 = 11.303
5) Balancing circuit for each sell can be enabled individually by setting CELL_x_BAL to 1. While balancer (cell FET) is on, don't read battery voltage, as you could get less precise cell voltage

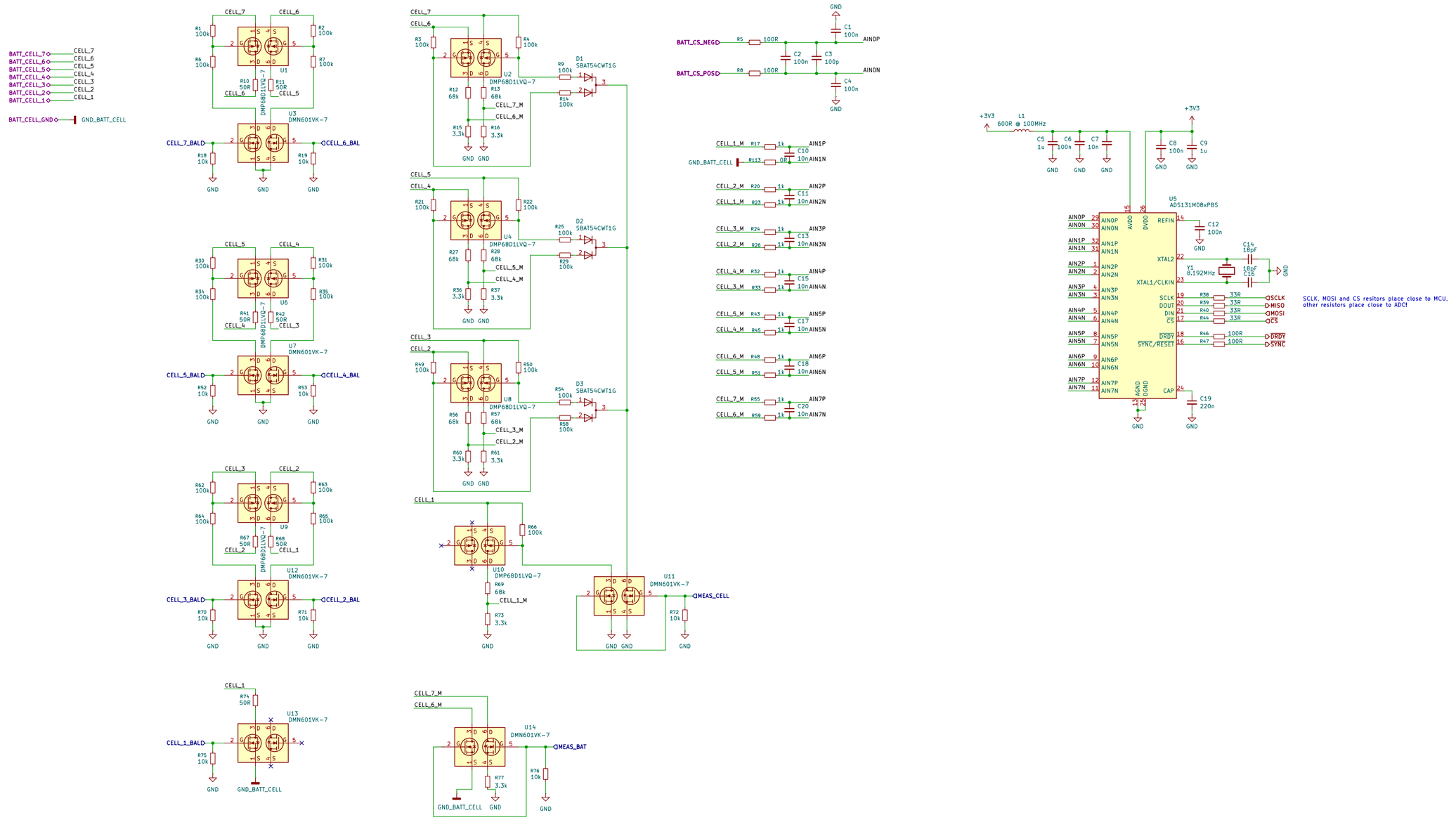

Open Source Battery Management System
Designed by OpenBatt team
More at openbatt.dev

Sheet: /ADC/
File: ADC.kicad_sch

Title: OpenBMS

Size: A2	Date: 2026-03-24	Rev: A
KiCad E.D.A. 9.0.7		Id: 2/7

About:
- STM32L43 MCU is system brain

Functionalities:
- Configure and reads data from ADC (ADS131M08)
- Controls balancer FETs
- Controls main switch (TPS1200)
- Reads battery NTC
- Stores battery data into EEPROM
- Handles user communication I2C and CAN
- Provides UART debug communication

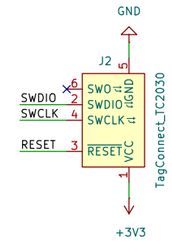

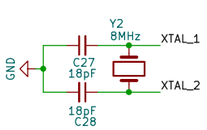

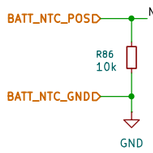

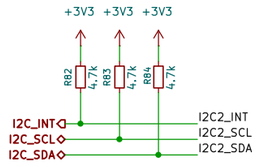

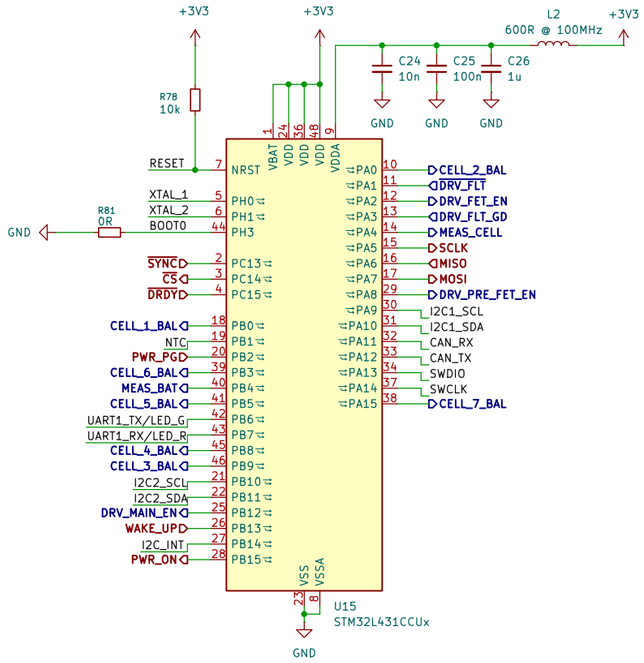

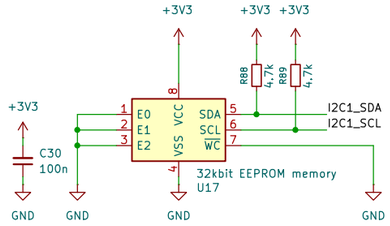

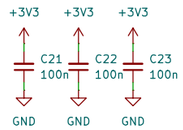

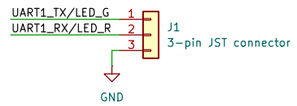

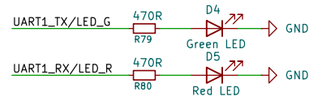

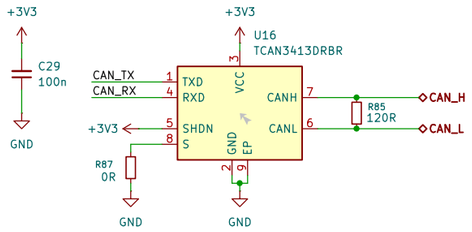

Open Source Battery Management System
Designed by OpenBatt team
More at openbatt.dev

Sheet: /MCU/
File: MCU.kicad_sch

Title: OpenBMS

Size: A3	Date: 2026-03-24	Rev: A
KiCad E.D.A. 9.0.7		Id: 3/7

About:
- TPS1200 is main battery switch. It controller power FETs and protect against battery overvoltage, undervoltage and overcurrent

Design Parameters:
- 7-cell battery, minimum cut-off voltage 2.5V x 7 = 17.5V (set by EN/UVLO and OV resistors)
- 7 cell battery, maximum cut-off voltage 4.3V x 7 = 30.1V (set by EN/UVLO and OV resistors)
- Maximum battery cut-off current = 20A (set by shunt resistor and ISCP resistor)
- Burn-out fuse will blow at 25A within 0.3-0.65

How to use it:
1) Set DRV_MAIN_EN to 1 to enable TPS1200
2) Set DRV_PRE_FET_EN to 1 to start precharge/predischarge (optional)
3) Set DRV_FET_EN to 1 to enable main FETs. This enables battery charge/discharge
4) Watch for DRV_FLT_GD. When 1, FET gate voltage is good
5) Watch for FLT. When 0, there is a fault present (overvoltage, undervoltage, excesive current..)

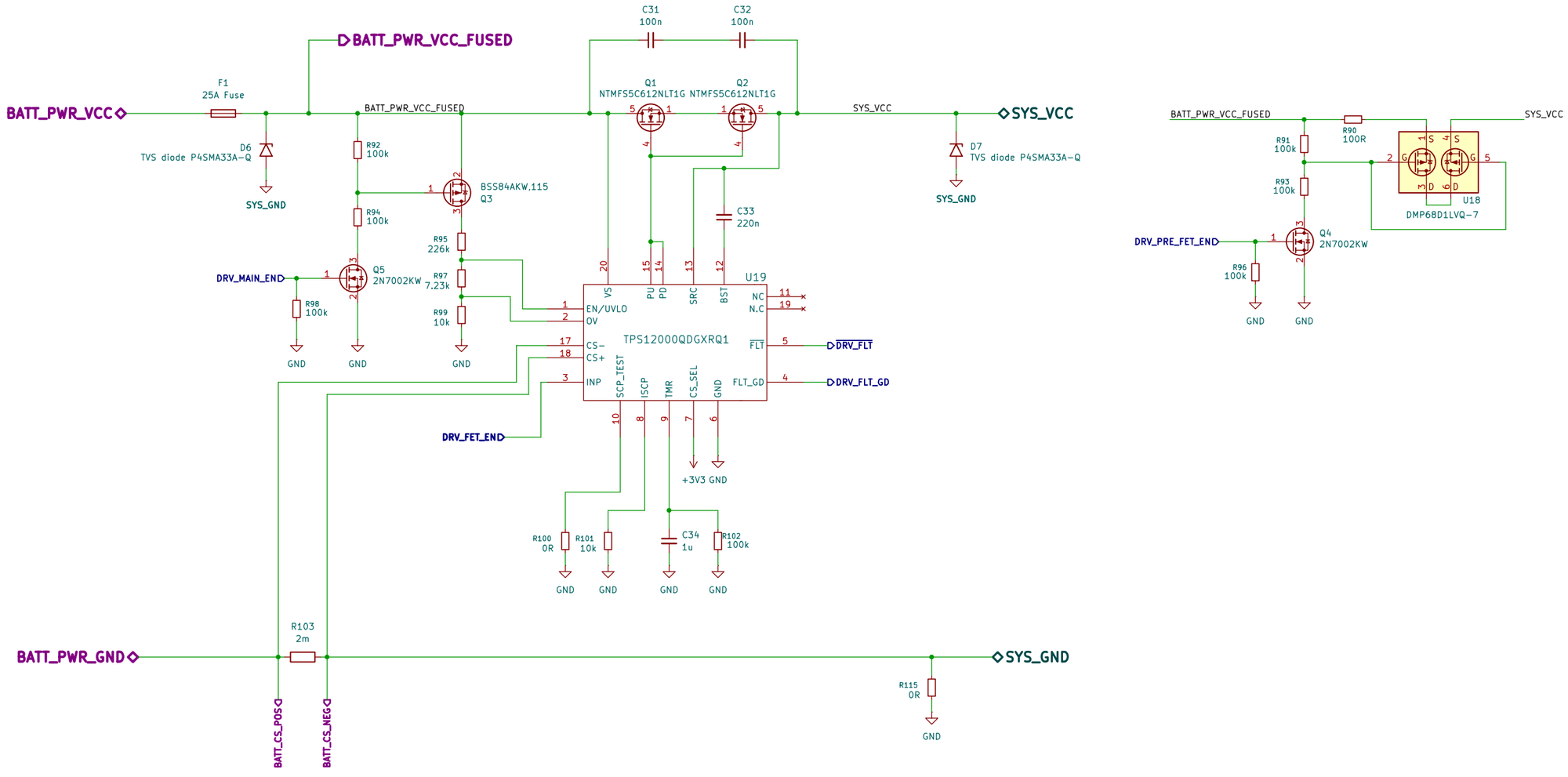

Open Source Battery Management System
Designed by OpenBatt team
More at openbatt.dev

Sheet: /FETs/
File: FETs.kicad_sch

Title: OpenBMS

Size: A3	Date: 2026-03-24	Rev: A
KiCad E.D.A. 9.0.7		Id: 4/7

About:
- Input of the battery. XT60 power connector + 8-pin JST connector for cell wirse + 2-pin JST connector for battery NTC

Design info:
-If battery has less then 7 cells, then place jumper between cell connections which are not being used, e.g. for 5-cell battery jumpers between cells 6 and 7 and betwenn 5 and 6 need to be populated

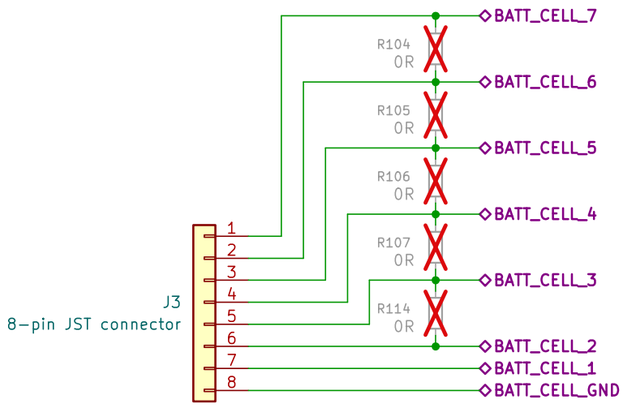

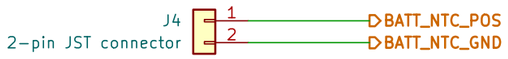

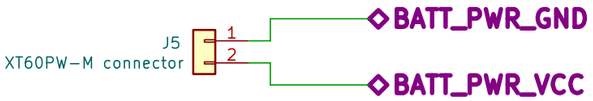

Open Source Battery Management System
Designed by OpenBatt team
More at openbatt.dev

Sheet: /Battery/
File: Battery.kicad_sch

Title: OpenBMS

Size: A4	Date: 2026-03-24	Rev: A
KiCad E.D.A. 9.0.7		Id: 5/7

About:
- Output of the BMS, power XT60 connector + JST connector with signals

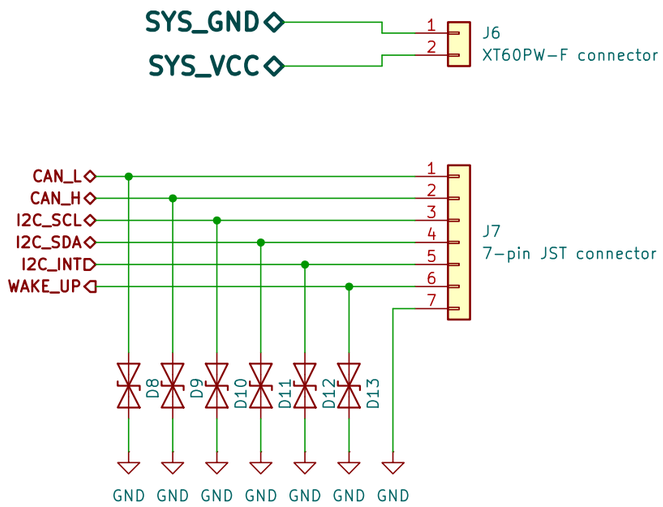

Open Source Battery Management System
Designed by OpenBatt team
More at openbatt.dev

Sheet: /Output/
File: Output.kicad_sch

Title: OpenBMS

Size: A4	Date: 2026-03-24	**Rev: A**
KiCad E.D.A. 9.0.7		Id: 6/7

About:
- Buck converter generates 3.3V out of 4-35V, output up to 500mA. By defult, power converter is off and whole system too. To enable it, signal from outside WAKE_UP needs to be set to 1. After that, once STM32 controller gets on, it can continue keeping power on by setting PWR_ON signal to 1.

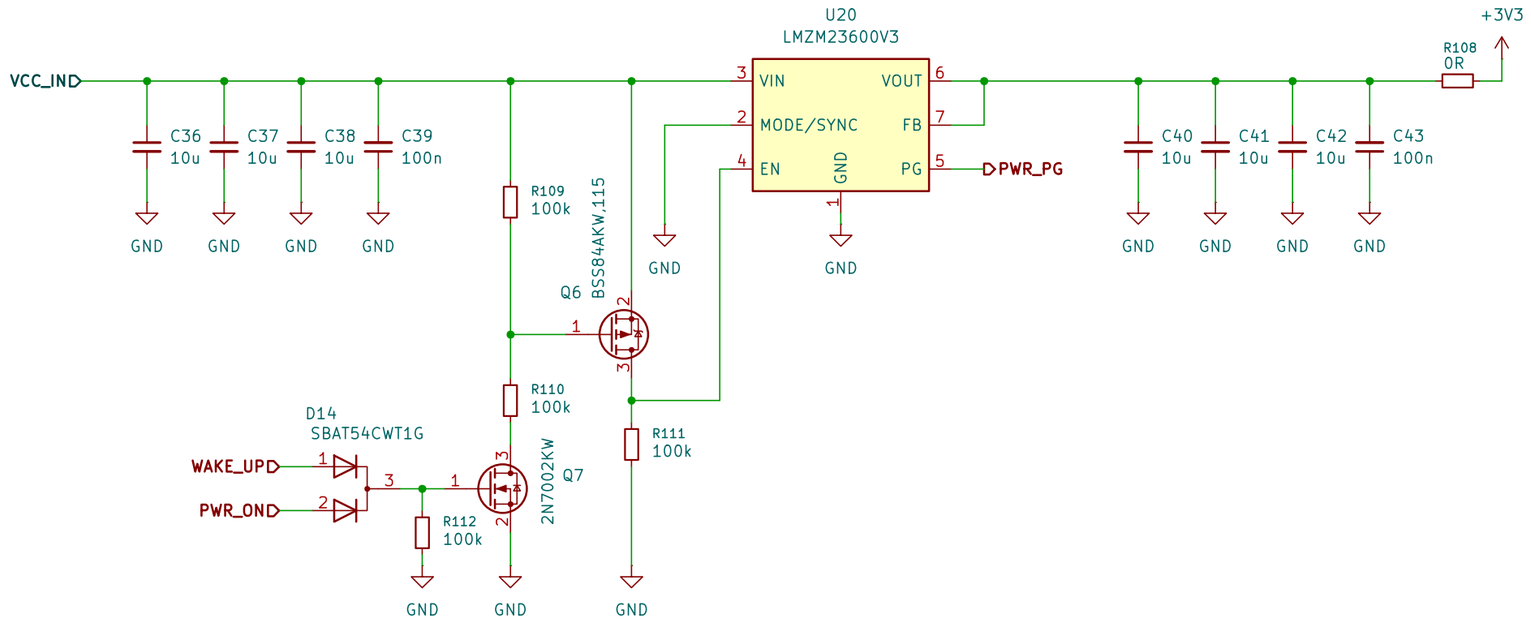

Open Source Battery Management System
Designed by OpenBatt team
More at openbatt.dev

Sheet: /Power/
File: Power.kicad_sch

Title: OpenBMS

Size: A4	Date: 2026-03-24	**Rev: A**
KiCad E.D.A. 9.0.7		Id: 7/7